REVISIONS				
DRAWN	REV	DESCRIPTION	DATE	APPROVED
TC	01	Consolodated all previous materials to one spec. Historic prints have no revisions, this print continues the format with rev 01.	6-4-10	JS
KP/TC	02	ADDED WEIGHT, UPDATED FORMAT, ADDED CAVITY LOCATION	5-31-12	MS

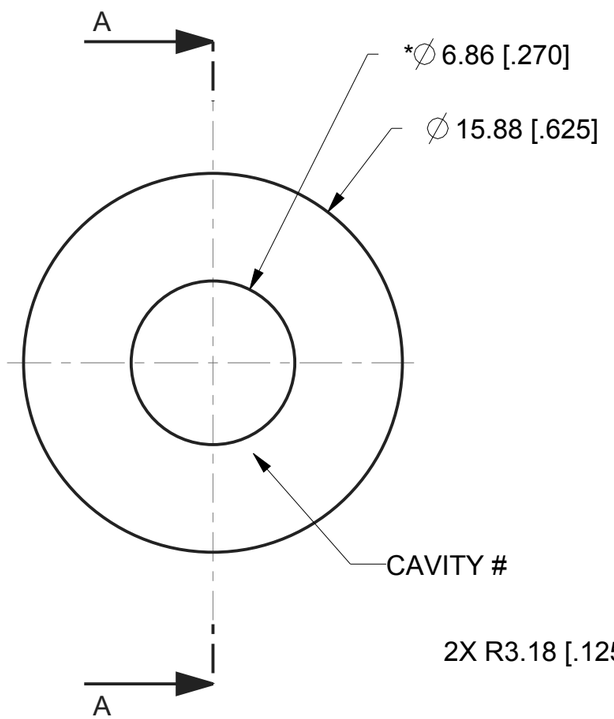

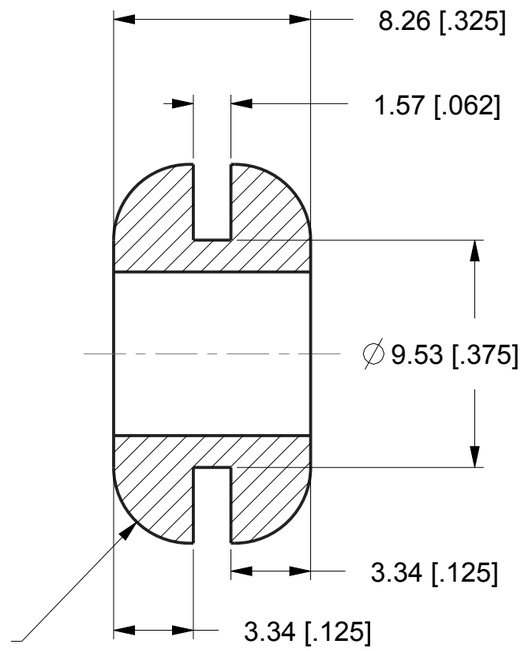

SECTION A-A

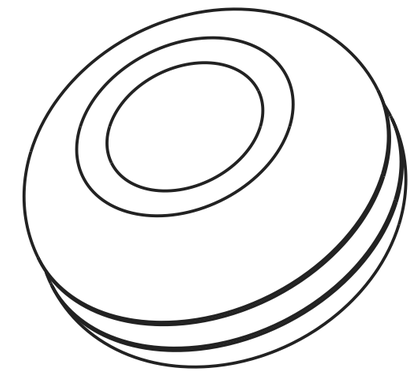

3. MAX 2° DRAFT.

2. CRITICAL DIMENSIONS SHALL HAVE Cpk VALUE >= 1.33 WITH ONGOING SPC DATA REQUIRED.

1. CRITICAL DIMENSIONS ARE MARKED WITH "*".

NOTES:

PART NUMBER	MATERIAL
G-521-C8012	C-8012
G-521-C8002	C-8002
G-521-C8001	C-8001
G-521-V2325	V-2325
G-521-3	C-1100
G-521-2	C-1105
G-521-1	C-1002

DIM RANGE	VERSADAMP & ISODAMP TOL
0<DIM<=2 [.078]	± 0.15 [.006]
2 [.078]<DIM<=25 [.98]	± 0.25 [.010]
25 [.98]<DIM<=50 [1.969]	± 0.4 [.016]
50 [1.969]<DIM	± 0.6 [.024]

UNLESS OTHERWISE SPECIFIED
UNITS ARE: MM [IN]
TOLERANCE FOR ANGLES: ±1.0°

ALLOWABLE FLASH:
.12MM [.005]

GATE:
±.15MM [.006]

CALC WT. 1.2 GRAM REF

MATERIAL:
SEE TABLE ON LEFT

QUALITY CONTROL:
MUST COMPLY WITH E-A-R SPECIALTY COMPOSITES SUPPLIER QUALITY MANUAL REQUIREMENTS

NOTES:
ANY FEATURE NOT DIMENSIONED IN PRINT MUST BE VISIBLY PRESENT, UTILIZE 3D CAD FOR CREATION

AEARO TECHNOLOGIES LLC * a 3M company

TITLE
NON-RIBBED, SYMMETRICAL GROMMET

SIZE	DRAWING NO.	PAGE NO.
B	G-521-X	1 OF 1